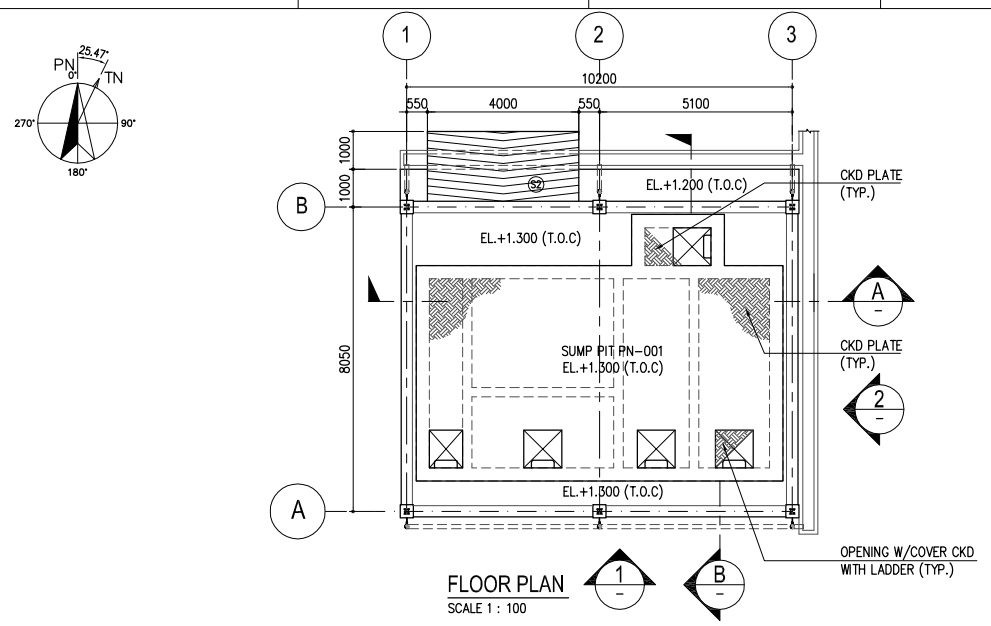

FLOOR PLAN
SCALE 1 : 100

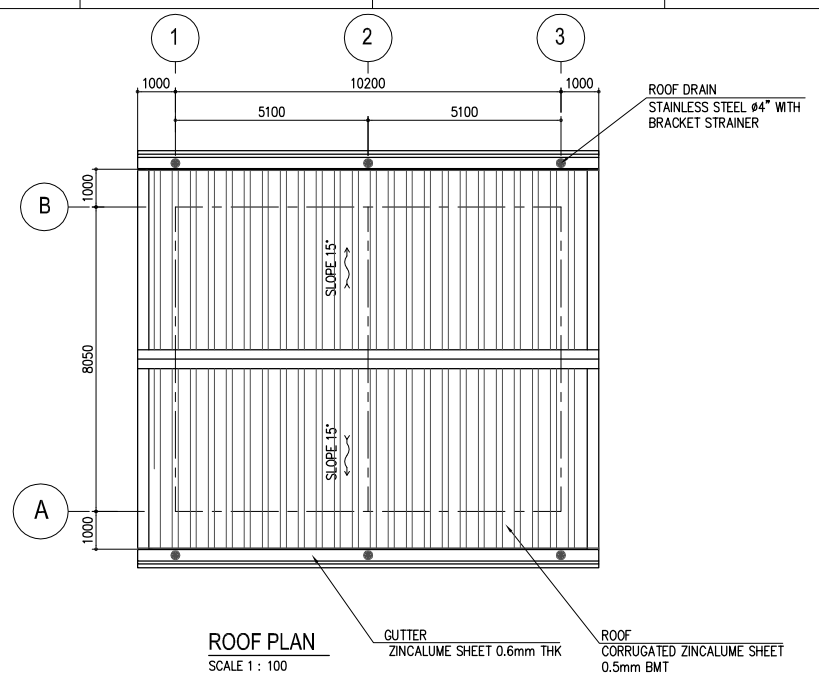

ROOF PLAN
SCALE 1 : 100

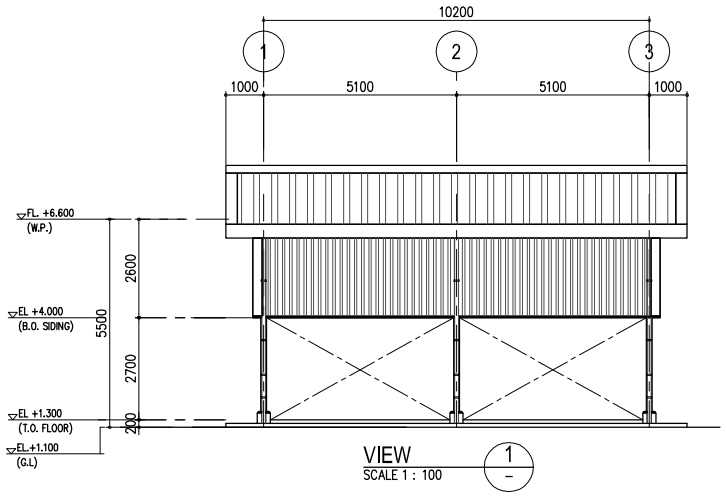

VIEW 1
SCALE 1 : 100

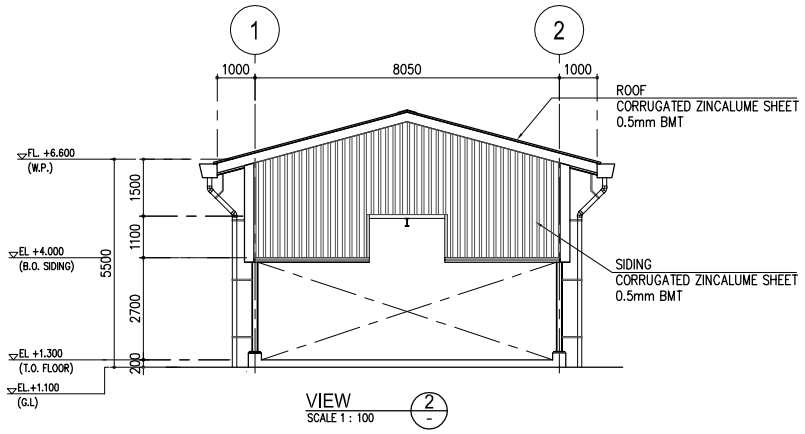

VIEW 2
SCALE 1 : 100

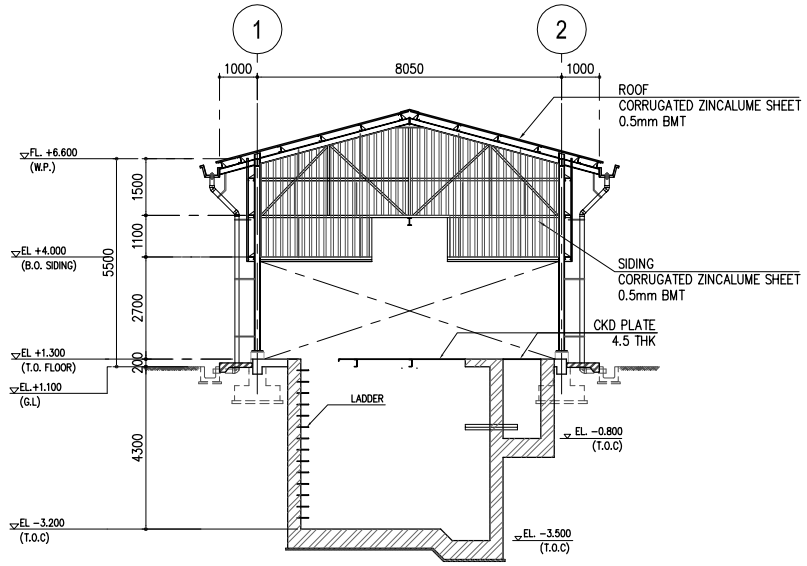

SECTION A
SCALE 1 : 100

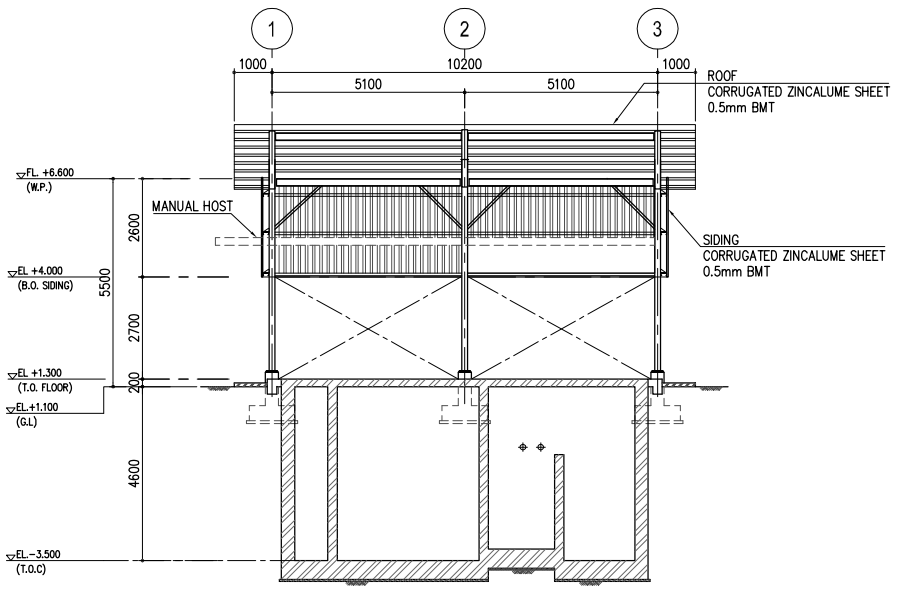

SECTION B
SCALE 1 : 100

KEY PLAN

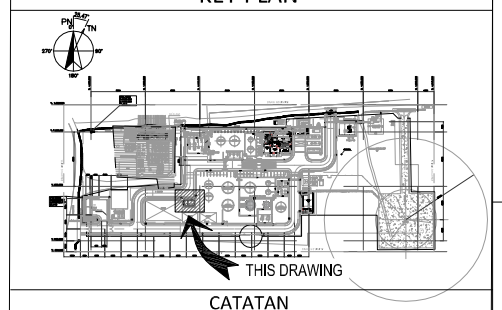

CATATAN

NOTE :

1. ALL DIMENSIONS ARE IN MILIMETERS, ELEVATION AND COORDINATE ARE IN METERS UNLESS OTHERWISE NOTED.
2. REFERENCE OF ELEVATION AND COORDINATE
   GL ± 0.000 = MSL +33.75 = +1.100
3. LEGEND :
   - = REINFORCED CONCRETE
   - = BRICK WALL
   - = SLOPE
4. ABBREVIATION :
   G.L = GROUND LEVEL
   F.F.L = FLOOR FINISH LEVEL
   E.L = ELEVATION LEVEL
   T.O.C = TOP OF CONCRETE

FINISHING SCHEDULE

SURFACE OR PART OF	MATERIAL	FINISH	REMARK
	CORRUGATED ZINCALUME SHEET 0.5 MM THK (BMT)	PVF2 PLUS, COLORLATER	–
	CORRUGATED ZINCALUME SHEET 0.5 MM THK (BMT)	PVF2 PLUS, COLORLATER	–
FLASHING AND GUTTER	FLAT ZINCALUME SHEET 0.6MM THK (BMT)	PVF2 PLUS, COLORLATER	–
ROOF EAVES	FLAT ZINCALUME SHEET 0.6MM THK (BMT)	PVF2 PLUS, COLORLATER	–
FLOOR AND OUT DOOR STEP	REINFORCED CONCRETE	STEEL TROWEL FINISH	–
DOWNSPOUT	PVC PIPE ø4" AW CLASS W, WITH DOWNSPOUT FIXING GALVANIZED PLATE BAR 4 THK Ø1200	PAINTED	–
ROOF DRAIN	STAINLESS STEEL ø4"W/ BRACKET STAINER	–	–

STRUCTURE

COLUMN & BEAM	STEEL STRUCTURE	PAINTED	–
ROOF FRAME	STEEL STRUCTURE	PAINTED	–
FOUNDATION	REINFORCED CONCRETE	–	–

NOTES :

1. BEFORE STARTING CONSTRUCTION, CONTRACTOR SHALL VERIFY ACTUAL FIELD CONDITION AND DETERMINE LOCATION, ELEVATION OF EXISTING GRADING AND OTHER STRUCTURE. THE CONTRACTOR SHALL TAKE NECESSARY MEASURES TO HOLD SAFE AND PREVENT DAMAGE TO ANY EXISTING FACILITIES.

DRAWING REFERENCE	DESCRIPTION	REV	DATE	DESCRIPTION	PREPR'D	CHECK'D	APRV'D
TMBP-SP001-CS-FRM-105	FRAMING PLAN, ROOF PLAN, ELEVATION, SECTION & DETAIL FOR OILY PIT						
TMBP-SP001-CS-BLD-105	FOUNDATION PLAN, DETAIL AND SECTION OF OILY PIT SHELTER						
TMBP-SP001-CS-LAY-D102	OVERALL FOUNDATION LAYOUT						
TMBP-SP001-PI-PLP-101	OVERALL PLOT PLAN DRAWING	A	07/01/2026	ISSUED FOR REVIEW	NAS	AS	RTN

PT. PERTAMINA EP APPROVAL

CHECKED	APPROVED

PROCET :

JASA PEMBANGUNAN FASILITAS PRODUKSI STASIUN PENGUMPUL (SP) TANJUNG MIRING BARAT & KARANGAN TIMUR

OWNER : skkmigas PERTAMINA EP

CONTRACTOR : PCG

SCALE :	DRAWING NO.	SHEET. NO.	REV
1 : 100	TMBP-SP001-CS-ARC-105	1 OF 1	A

DRAWING TITLE :

ARCHITECTURE FLOOR PLAN, ROOF PLAN AND ELEVATION FOR OILY PIT SHELTER